ADLER

2|5

INSTRUCTION HANDBOOK

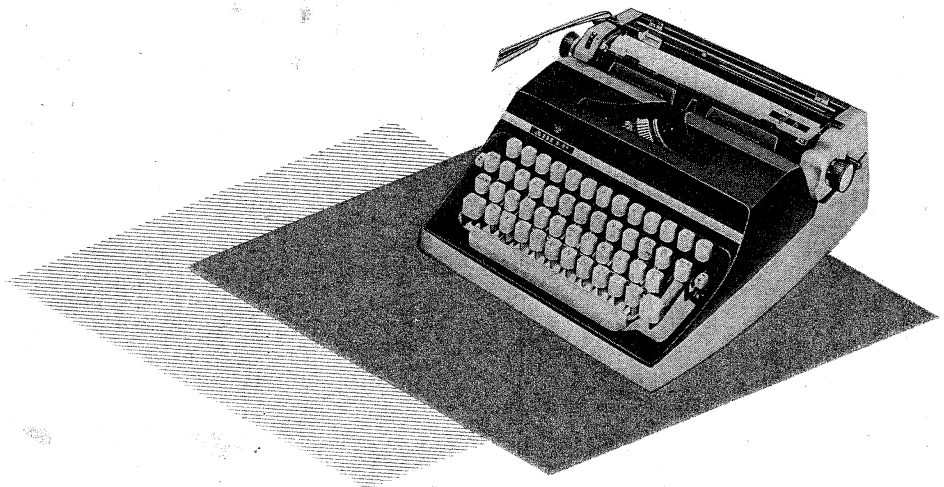

Writing on J 2 or J 5

In buying your portable typewriter you have chosen well. The following operational instructions are intended to serve you as guide enabling you to fully enjoy the various advantages offered by this typewriter. The essential points to be observed when typing with "J 2" or "J 5" are briefly described hereafter.

onfide in "J 2" or "J 5". The machine will show you everything by itself.

Many of you certainly will know our portable typewriters already, but the following hints will help you to become better acquainted with it.

$\sqrt{2} + \sqrt{5}$

You will find:

	Page
Bottom plate	8
Carriage lock	9
Paper rest	10/11
Paper bail	10/11
Paper guide	11
Paper release	12
Paper support	13
Paper support with terminal indicator	14
Margin stop	15
Line space regulator	15
Keyboard	16/17
Line space lever	18
Carriage release lever	18
Platen release	19
Line finder	20
Card holder	20
Ribbon	21
Ribbon reverse switch	21
Ribbon position indicator	22
Stroke regulator	22
Tabulator	23
Tabulator set and clear key	23
Service and maintenance	24

Survey of the various service parts of "J 2"

1 Space bar
2 Left and right shift key
3 Shift lock
4 Marginal release
5 Ribbon indicator
6 Ribbon reverse switch
7 Line space lever
8 Carriage lock
9 Platen knob
left side variable line space device
10 Carriage release
11 Line space regulator
12 Platen release
13 Left margin stop
14 Left hand paper guide
15 Scale
16 Paper discharge guide
17 Paper holder
18 Paper support
19 Line finder with card holder
20 Right margin stop
21 Stops
22 Paper rest
23 Paper release
24 Platen
25 Ribbon spool
26 Tabular set and clear key
27 Back spacer
28 Tabular key

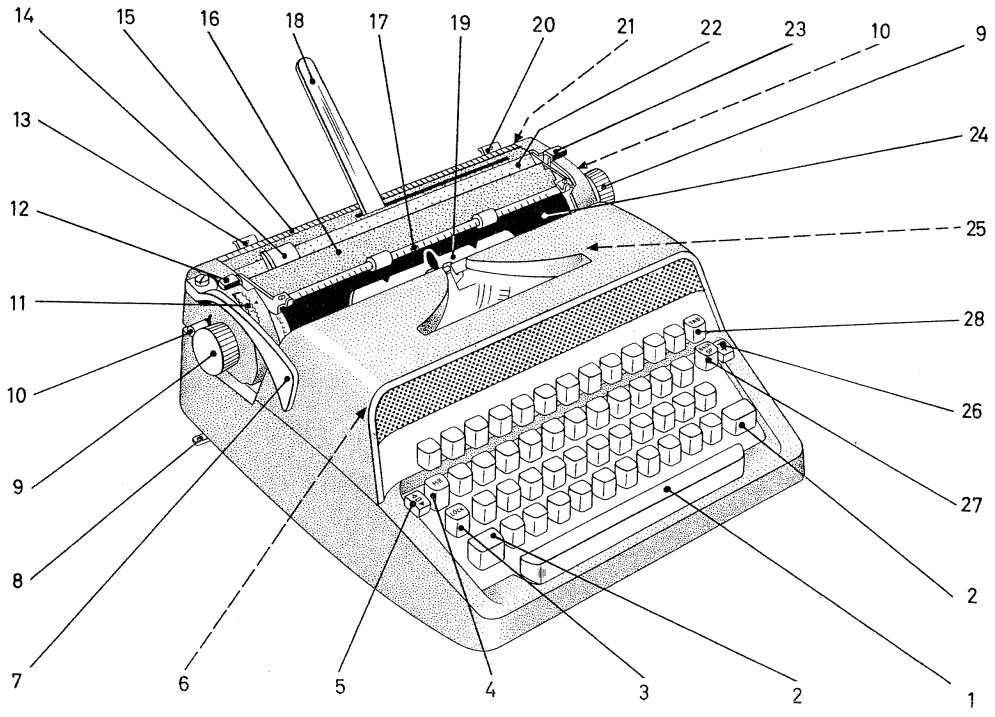

Survey of the various service parts of "J 5"

1 Space bar
2 Left and right shift key
3 Shift lock
4 Marginal release
5 Ribbon indicator
6 Ribbon reverse switch
7 Line space lever
8 Carriage lock
9 Platen knob
left side variable line space device
10 Carriage release
11 Line space gauge
12 Platen release
13 Left margin stop
14 Left hand paper guide
15 Scale
16 Paper discharge guide
17 Paper holder
18 Paper support with terminal indicator
19 Card holder
20 Line finder
21 Right margin stop
22 Stops
23 Paper rest
24 Paper release
25 Platen
26 Ribbon spool
27 Tabular set and clear key
28 Back spacer
29 Tabular.key

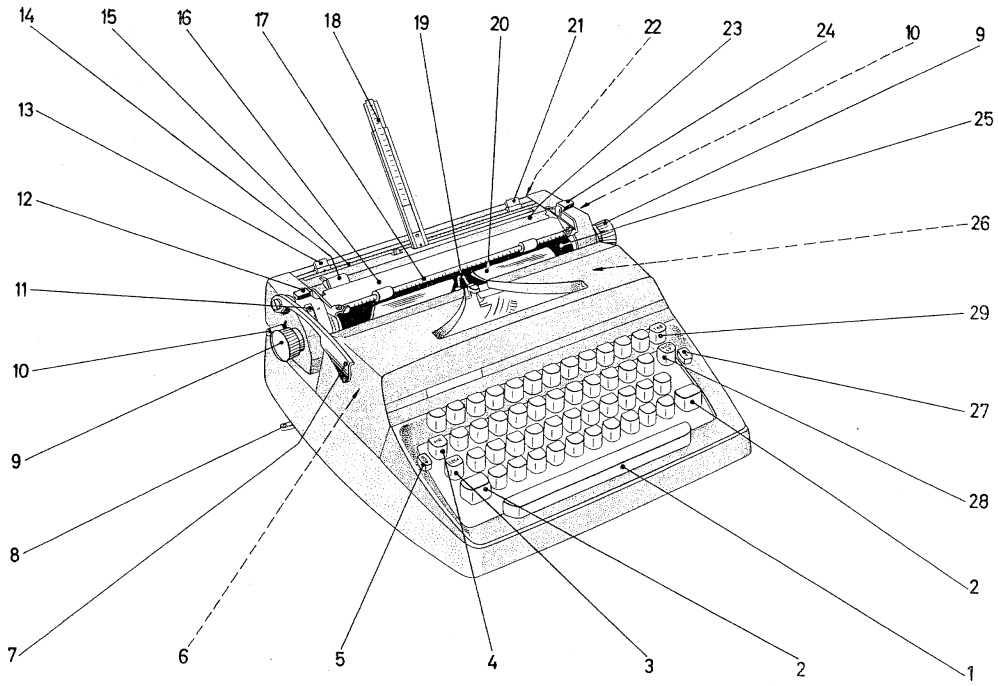

2

course you may also type on
ır machine when the same is
y half unpacked, viz. by simply
ıoving the cover. However, you
y also take off the bottom pla-
Simply push back the two snap
ers and you will be able to lift
your typewriter.

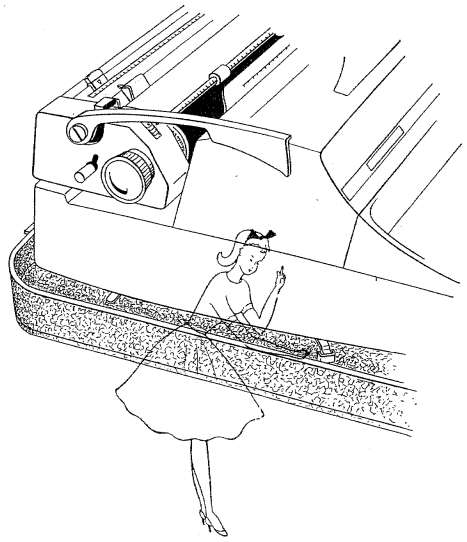

5

h the new carrying case you
y only type with the machine
en off the bottom plate.

J 2+J 5

It does not move?
This is not necessary, for it is not supposed to have "its own way of doing things", as long as you do not type on it. Pull forward the small lever on the left hand side locking the carriage, and your typewriter is ready for action.

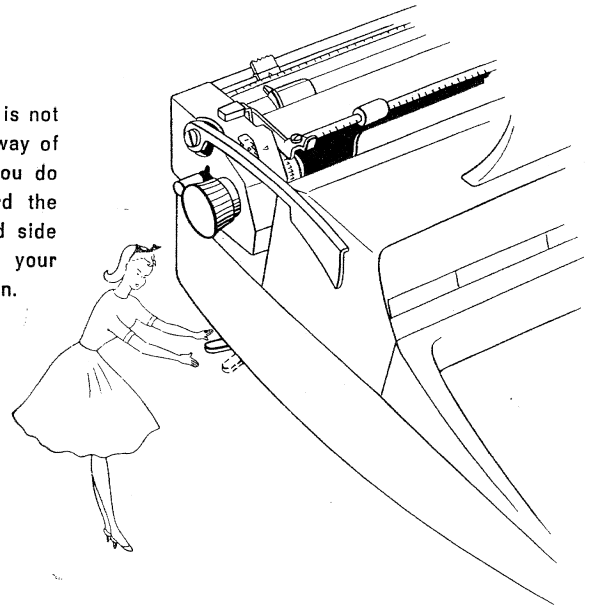

2

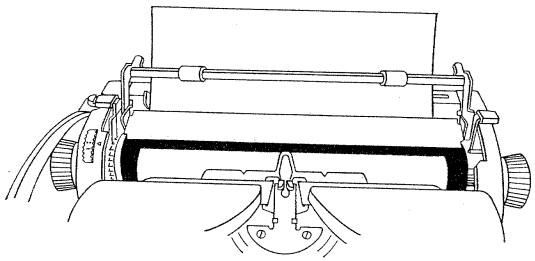

When inserting the sheet of paper also raise the paper bail.
Push the paper stop to the left margin of your sheet of paper, so that the following sheets will have the same position.

The sheet of paper automatically goes under the rollers of the paper holder when inserting same. Push the paper stop to the left margin of your sheet of paper, so that the following sheets will have the same position.

5

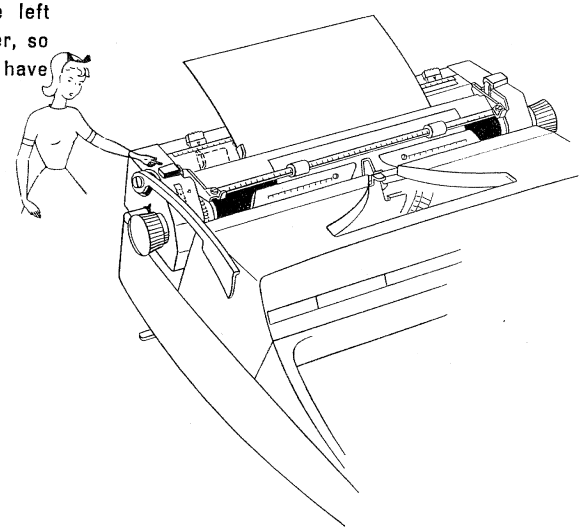

uld the sheet of paper not have its correct position then the paper release will help
. Adjust your sheet of paper properly in accordance with the horizontal line setter.
lso corresponds exactly with the base line of your typing line. Do not forget to push
k the paper release as soon as this adjustment has been completed.

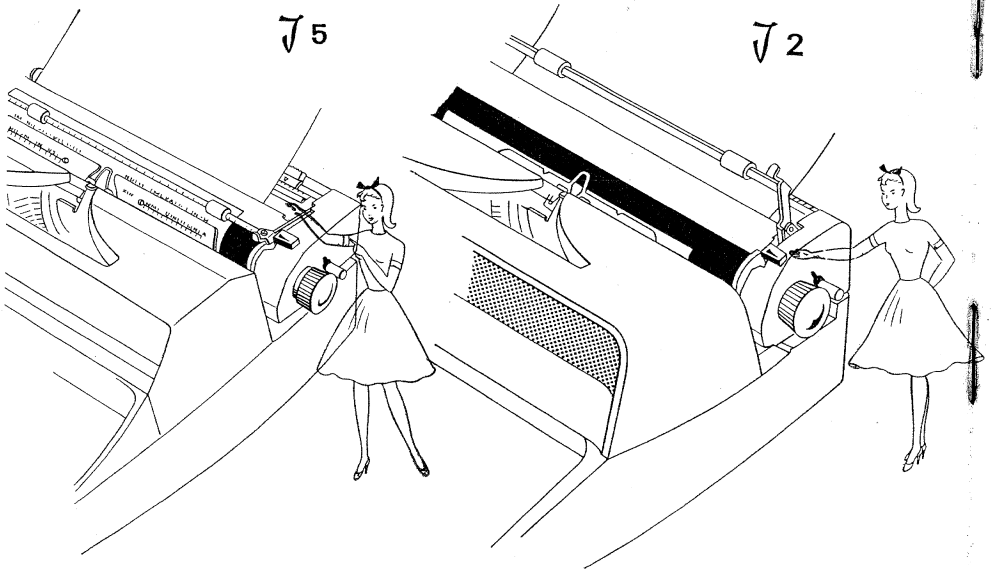

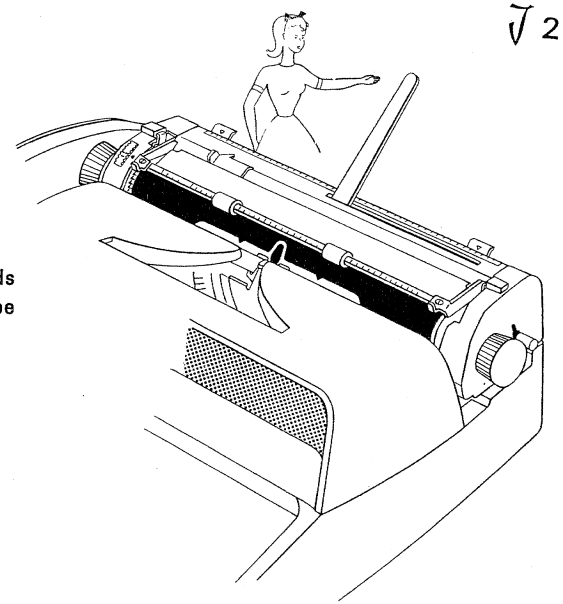

Bring the paper support upwards when typing, it will prove to be very useful.

5

simply striking the release lever, the per support jumps into its position. the terminal indicator which can be lled out you will see different mark- ıs. Whenever the top of the sheet of per reaches a certain marking this l indicate that the lower end of the eet has been reached — taking into count, of course, a suitable margin.

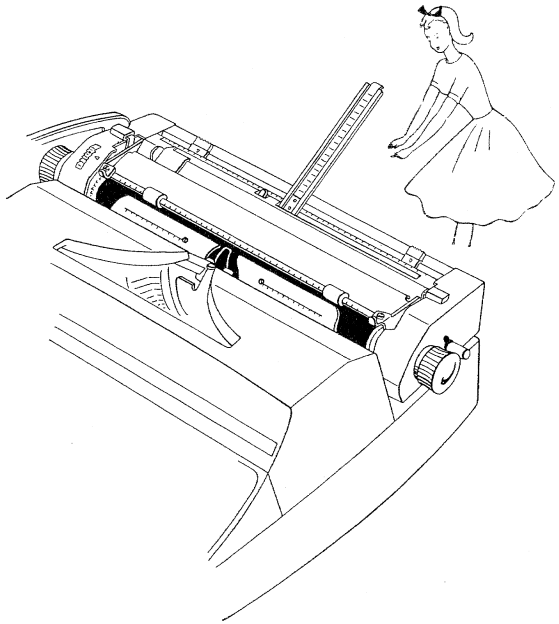

$\sqrt{2} + \sqrt{5}$

This is important:

You will most certainly want that your letters get that personal touch. This depends on how you distribute the type on the sheet of paper. The two margin sets help you as to the limitation of the length of a line; the line spacer accounts for the even space between the lines. With it you can set one, one and a half and twofold space between the lines. The adjusted length of a line you control on the scale of the paper holder. On the scale of the paper holder is in agreement with the scale of the margin placer.

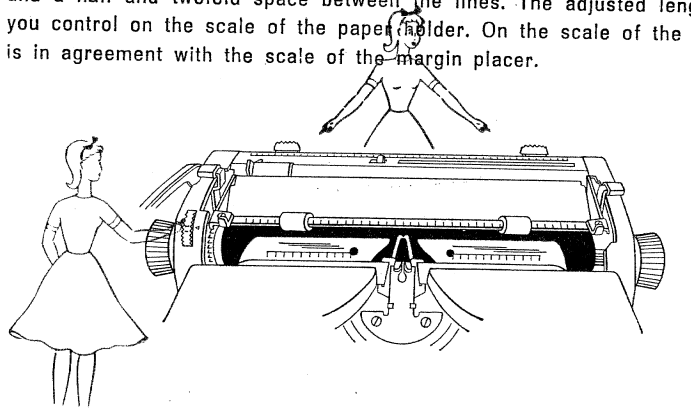

$2+\sqrt{5}$

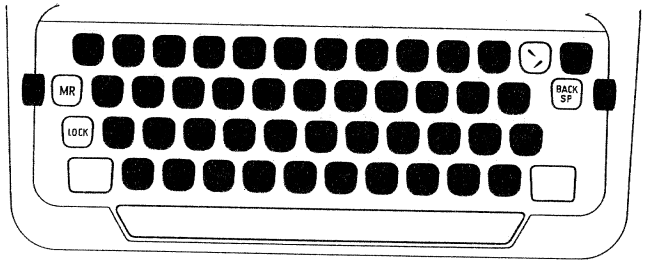

Before starting — a swift glance on your keyboard:

MR — Marginal release — strike the key when you wish to write outside of the length of line set, viz. before the beginning of the line or after its end.

BACK SP — Back spacer — it moves the carriage one notch towards the right.

Shift key — left and right, for capital letters and signs (special characters).

$\sqrt{2+\sqrt{5}}$

LOCK — Shift key lock — for continuous shift, pressing down the left shift key will release it.

Dead key (accentkey) — has to be struck before the letter carrying the accent. The accent ^ (circonflex) may be obtained by combining the simple accents ´ and ` .

Space bar — for intermediate spacing and letter spacing.

Correcting Space Bar?

Omitted letters can easily be filled in, e. g.

ADLER WRKE FRANKFURT
ADLER WERKE FRANKFURT

Keep the space bar in a pressed position and type the first letter. Then let go of the space bar, repress it and type the next letter and so on. With the same method you can reach the margin balance at the end of a line, too.

$\sqrt{2}+\sqrt{5}$

w go to work with courage
d good faith!

ch time when you strike a key
e carriage moves one notch
vards the left. Eight strikes be-
e the end of a line the bell
unds — then it is about time
finish this particular line.
manipulating the line space
er you will attain the next line
writing. — The carriage may
pushed left or right by means
one of the two carriage release
ers.

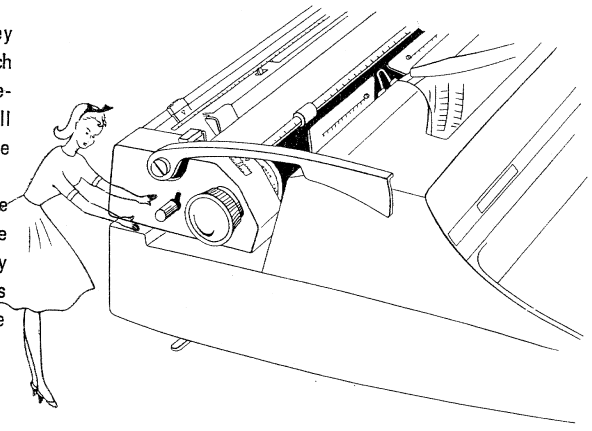

For instance if you wish to type a lined blank or sheet of paper simply pull out the left platen knob; thus the platen may be turned independantly of the original line spacing. Turn the platen until the line to be written is even with the line on the scale of the line setter, and push back the left platen knob.

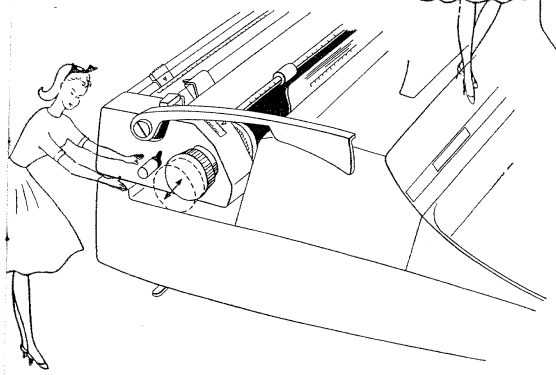

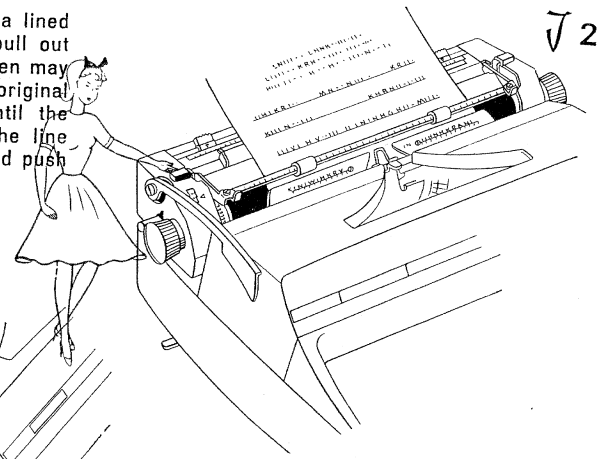

By pulling the platen release lever towards the front the platen turns freely. As soon as the platen release is returned to its starting position the original line rhythm will be restored.

You can also draw lines. Place a pencil into the notch of the left or right line setter — pull the carriage release towards the front — and move the carriage either way; you will have a horizontal line. If you want to obtain vertical lines pull the carriage release forward and turn the platen.

J 2

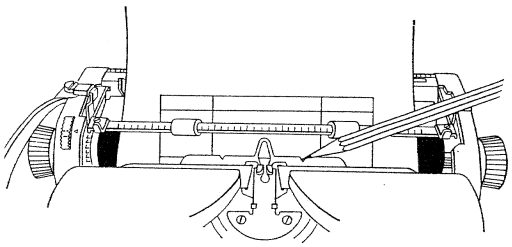

J 5

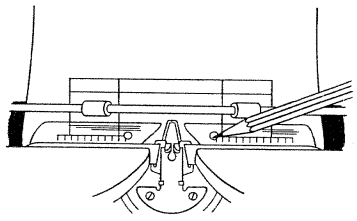

J 2+J 5

As far as the ribbon is concerned this is a simple affair. Normally it does not need any attention, for your typewriter takes care of it itself watching that it spools off regularly.

When replacing a ribbon lift the ribbon cover by a slight pull upwards. When you swing out the brake lever you will be able to remove the ribbon. Now all that remains for you to do is to insert the new ribbon into the ribbon fork as illustrated below. The two ribbon reverse switches allow you to adjust the movement of the ribbon either way.

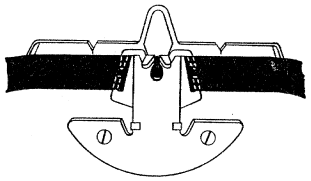

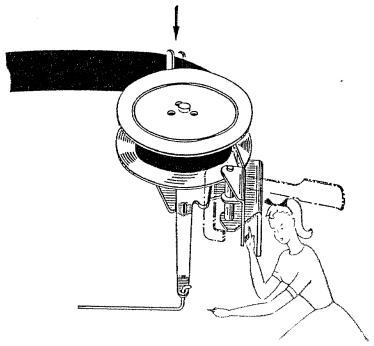

2+ 5

You can also use a bicolor ribbon, for instance black/red. Insert the ribbon in such a way that the black part will be on top. With the ribbon adjuster you will be able to obtain three settings:
direction of arrow white: for typing stencils.
center position blue: the ribbon is set on the upper half.
direction of arrow red: the ribbon is set on the lower half.

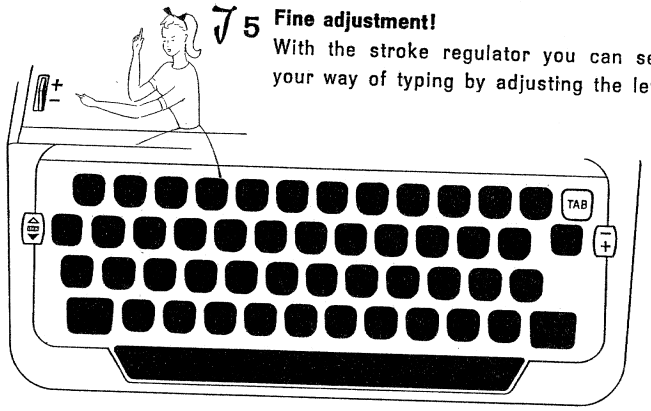

5 Fine adjustment!

With the stroke regulator you can set the key pressure to your way of typing by adjusting the lever from — to +.

2+ 5

When typing tables, columns or lists etc. the tabulator offers special advantages. Your machine is equipped with so-called "stops" by means of which any desired position of a line may be obtained upon striking the tabulator key.
Previously, however, the stop has to be set. Move the carriage to the spot where you wish to set a stop and now push the tab. set and clear lever in the direction marked by the + sign. This operation may be repeated as often as necessary. Now you can start... strike the tabular key... and the carriage will stop at the designated position.

Perhaps, a stop is to be set one notch further to the left... this is quite simple.
Move the carriage over to the wrong position of the stop and push the set and clear lever in the direction marked by the — sign. Now the tabulator is "cleared", and it can be reset correctly.
Whenever you wish to clear all stops simultaneously simply push the carriage to the right until stop. Now press the set and release lever in the direction marked by the — sign and simultaneously press the tabular key. During the movement of the carriage to the left all set tabulators are cleared.

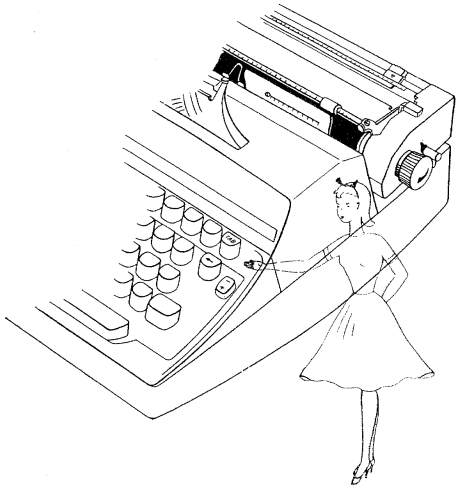

$2+\sqrt{5}$

A wish!

Never forget that your typewriter also needs a certain amount of maintenance. It already begins when you first start typing. Never abuse your typewriter. For erasing push the carriage all the way to the left or right in order to prevent the dust developped from dropping into the machine. Clean the keys from time to time by brushing them lengthwise on the face of the keys. If your typewriter is not used for any length of time, pull the paper release lever forward and cover the machine. Your typewriter will be grateful for it and show its gratitude by giving good and reliable service.

Any further questions and problems will be answered by your

ADLER dealer.